UNIVERSITY OF CAMBRIDGE INTERNATIONAL EXAMINATIONS
General Certificate of Education Advanced Level

CANDIDATE NAME

CENTRE NUMBER

CANDIDATE NUMBER

0559585053

PHYSICS **9702/41**

Paper 4 A2 Structured Questions **May/June 2012**

2 hours

Candidates answer on the Question Paper.

No Additional Materials are required.

READ THESE INSTRUCTIONS FIRST

Write your Centre number, candidate number and name on all the work you hand in.
Write in dark blue or black pen.
You may use a soft pencil for any diagrams, graphs or rough working.
Do not use staples, paper clips, highlighters, glue or correction fluid.
DO **NOT** WRITE IN ANY BARCODES.

Answer **all** questions.
You may lose marks if you do not show your working or if you do not use appropriate units.

At the end of the examination, fasten all your work securely together.
The number of marks is given in brackets [ ] at the end of each question or part question.

For Examiner's Use	
1	
2	
3	
4	
5	
6	
7	
8	
9	
10	
11	
12	
13	
Total	

This document consists of **23** printed pages and **1** blank page.

© UCLES 2012

Data

speed of light in free space,	$c = 3.00 \times 10^{8}\ \text{m s}^{-1}$
permeability of free space,	$\mu_0 = 4\pi \times 10^{-7}\ \text{H m}^{-1}$
permittivity of free space,	$\varepsilon_0 = 8.85 \times 10^{-12}\ \text{F m}^{-1}$
elementary charge,	$e = 1.60 \times 10^{-19}\ \text{C}$
the Planck constant,	$h = 6.63 \times 10^{-34}\ \text{J s}$
unified atomic mass constant,	$u = 1.66 \times 10^{-27}\ \text{kg}$
rest mass of electron,	$m_e = 9.11 \times 10^{-31}\ \text{kg}$
rest mass of proton,	$m_p = 1.67 \times 10^{-27}\ \text{kg}$
molar gas constant,	$R = 8.31\ \text{J K}^{-1}\ \text{mol}^{-1}$
the Avogadro constant,	$N_A = 6.02 \times 10^{23}\ \text{mol}^{-1}$
the Boltzmann constant,	$k = 1.38 \times 10^{-23}\ \text{J K}^{-1}$
gravitational constant,	$G = 6.67 \times 10^{-11}\ \text{N m}^2\ \text{kg}^{-2}$
acceleration of free fall,	$g = 9.81\ \text{m s}^{-2}$

© UCLES 2012

Formulae

uniformly accelerated motion, $s = ut + \frac{1}{2}at^2$
$v^2 = u^2 + 2as$

work done on/by a gas, $W = p\Delta V$

gravitational potential, $\phi = -\frac{Gm}{r}$

hydrostatic pressure, $p = \rho gh$

pressure of an ideal gas, $p = \frac{1}{3}\frac{Nm}{V}\langle c^2 \rangle$

simple harmonic motion, $a = -\omega^2 x$

velocity of particle in s.h.m., $v = v_0 \cos \omega t$
$v = \pm \omega \sqrt{(x_0^2 - x^2)}$

electric potential, $V = \frac{Q}{4\pi\varepsilon_0 r}$

capacitors in series, $1/C = 1/C_1 + 1/C_2 + \ldots$

capacitors in parallel, $C = C_1 + C_2 + \ldots$

energy of charged capacitor, $W = \frac{1}{2}QV$

resistors in series, $R = R_1 + R_2 + \ldots$

resistors in parallel, $1/R = 1/R_1 + 1/R_2 + \ldots$

alternating current/voltage, $x = x_0 \sin \omega t$

radioactive decay, $x = x_0 \exp(-\lambda t)$

decay constant, $\lambda = \frac{0.693}{t_{\frac{1}{2}}}$

© UCLES 2012

[Turn over

Section A

Answer **all** the questions in the spaces provided.

1 **(a)** Define *gravitational potential* at a point.

.....

..... [1]

(b) The gravitational potential ϕ at distance r from point mass M is given by the expression

$$\phi = -\frac{GM}{r}$$

where G is the gravitational constant.

Explain the significance of the negative sign in this expression.

.....

.....

..... [2]

(c) A spherical planet may be assumed to be an isolated point mass with its mass concentrated at its centre. A small mass m is moving near to, and normal to, the surface of the planet. The mass moves away from the planet through a short distance h.

State and explain why the change in gravitational potential energy ΔE_P of the mass is given by the expression

$$\Delta E_P = mgh$$

where g is the acceleration of free fall.

.....

.....

.....

.....

.....

..... [4]

© UCLES 2012

(d) The planet in **(c)** has mass M and diameter 6.8×10^3 km. The product GM for this planet is 4.3×10^{13} N m^2 kg^{-1}.

A rock, initially at rest a long distance from the planet, accelerates towards the planet. Assuming that the planet has negligible atmosphere, calculate the speed of the rock as it hits the surface of the planet.

speed = ... m s^{-1} [3]

2 **(a)** The kinetic theory of gases is based on some simplifying assumptions.
The molecules of the gas are assumed to behave as hard elastic identical spheres.
State the assumption about ideal gas molecules based on

(i) the nature of their movement,

.....

..... [1]

(ii) their volume.

.....

.....

..... [2]

© UCLES 2012

(b) A cube of volume V contains N molecules of an ideal gas. Each molecule has a component c_X of velocity normal to one side S of the cube, as shown in Fig. 2.1.

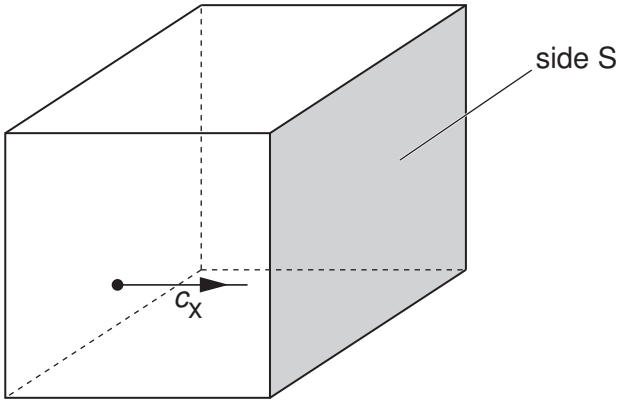

Fig. 2.1

The pressure p of the gas due to the component c_X of velocity is given by the expression

$$pV = Nmc_X^2$$

where m is the mass of a molecule.

Explain how the expression leads to the relation

$$pV = \tfrac{1}{3}Nm\langle c^2\rangle$$

where $\langle c^2\rangle$ is the mean square speed of the molecules.

[3]

(c) The molecules of an ideal gas have a root-mean-square (r.m.s.) speed of 520 m s^{-1} at a temperature of 27 °C.

Calculate the r.m.s. speed of the molecules at a temperature of 100 °C.

r.m.s. speed = ... m s^{-1} [3]

© UCLES 2012

3 **(a)** Define *specific latent heat*.

.....

.....

..... [2]

(b) The heater in an electric kettle has a power of 2.40 kW.
When the water in the kettle is boiling at a steady rate, the mass of water evaporated in 2.0 minutes is 106 g.
The specific latent heat of vaporisation of water is 2260 J g^{-1}.

Calculate the rate of loss of thermal energy to the surroundings of the kettle during the boiling process.

rate of loss = ... W [3]

© UCLES 2012

4 A small metal ball is suspended from a fixed point by means of a string, as shown in Fig. 4.1.

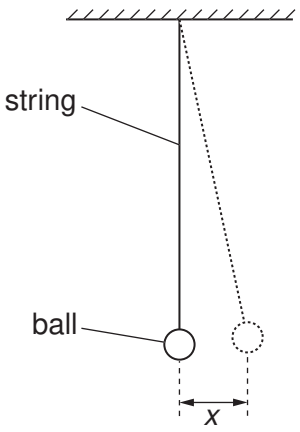

Fig. 4.1

The ball is pulled a small distance to one side and then released. The variation with time t of the horizontal displacement x of the ball is shown in Fig. 4.2.

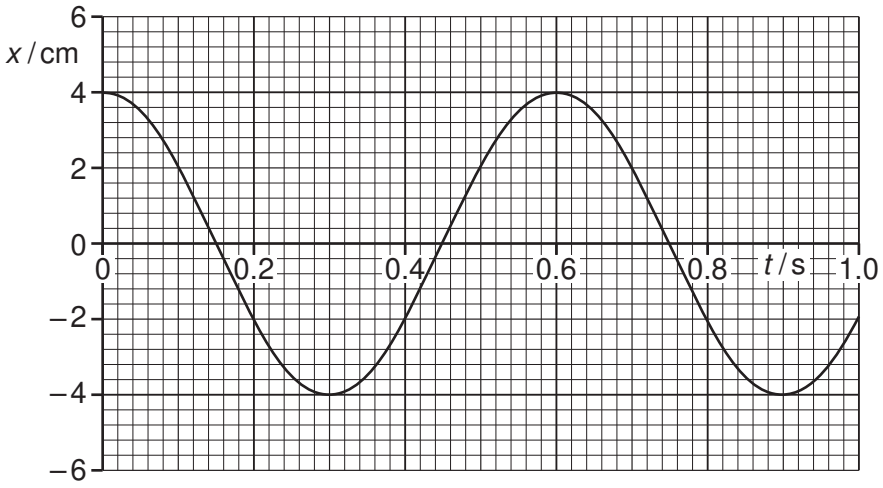

Fig. 4.2

The motion of the ball is simple harmonic.

(a) Use data from Fig. 4.2 to determine the horizontal acceleration of the ball for a displacement x of 2.0 cm.

acceleration = ... $m\,s^{-2}$ [3]

(b) The maximum kinetic energy of the ball is E_K.
On the axes of Fig. 4.3, sketch a graph to show the variation with time t of the kinetic energy of the ball for the first 1.0 s of its motion.

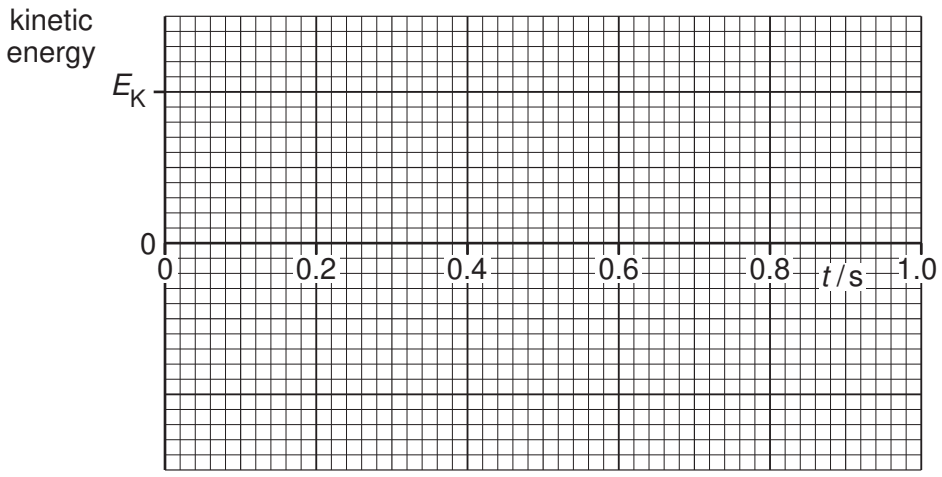

Fig. 4.3

[3]

5 **(a)** Define *electric field strength*.

.....

..... [1]

(b) An isolated metal sphere is to be used to store charge at high potential. The charge stored may be assumed to be a point charge at the centre of the sphere. The sphere has a radius of 25 cm. Electrical breakdown (a spark) occurs in the air surrounding the sphere when the electric field strength at the surface of the sphere exceeds 1.8×10^4 V cm^{-1}.

(i) Show that the maximum charge that can be stored on the sphere is 12.5 μC.

[2]

(ii) Calculate the potential of the sphere for this maximum charge.

potential = ... V [2]

6 A sinusoidal alternating voltage supply is connected to a bridge rectifier consisting of four ideal diodes. The output of the rectifier is connected to a resistor R and a capacitor C as shown in Fig. 6.1.

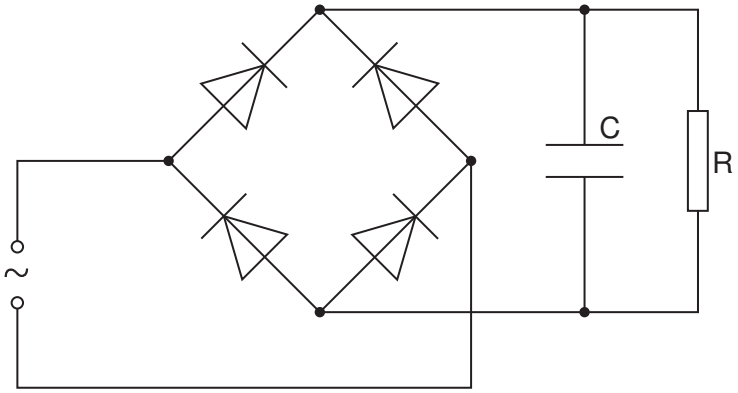

Fig. 6.1

The function of C is to provide some smoothing to the potential difference across R.
The variation with time *t* of the potential difference *V* across the resistor R is shown in Fig. 6.2.

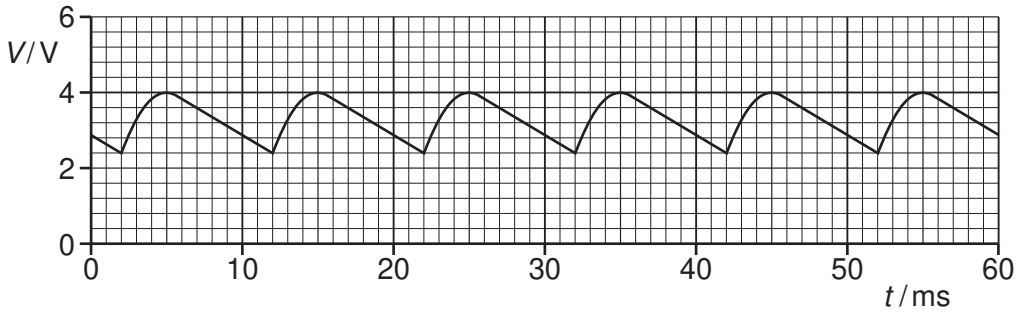

Fig. 6.2

(a) Use Fig. 6.2 to determine, for the alternating supply,

(i) the peak voltage,

peak voltage = ... V [1]

(ii) the root-mean-square (r.m.s.) voltage,

r.m.s. voltage = ... V [1]

© UCLES 2012

(iii) the frequency. Show your working.

frequency = ... Hz [2]

(b) The capacitor C has capacitance 5.0 μF.
For a single discharge of the capacitor through the resistor R, use Fig. 6.2 to

(i) determine the change in potential difference,

change = ... V [1]

(ii) determine the change in charge on each plate of the capacitor,

change = ... C [2]

(iii) show that the average current in the resistor is 1.1×10^{-3} A.

[2]

(c) Use Fig. 6.2 and the value of the current given in **(b)(iii)** to estimate the resistance of resistor R.

resistance = ... Ω [2]

© UCLES 2012

7 Two long straight parallel copper wires A and B are clamped vertically. The wires pass through holes in a horizontal sheet of card PQRS, as shown in Fig. 7.1.

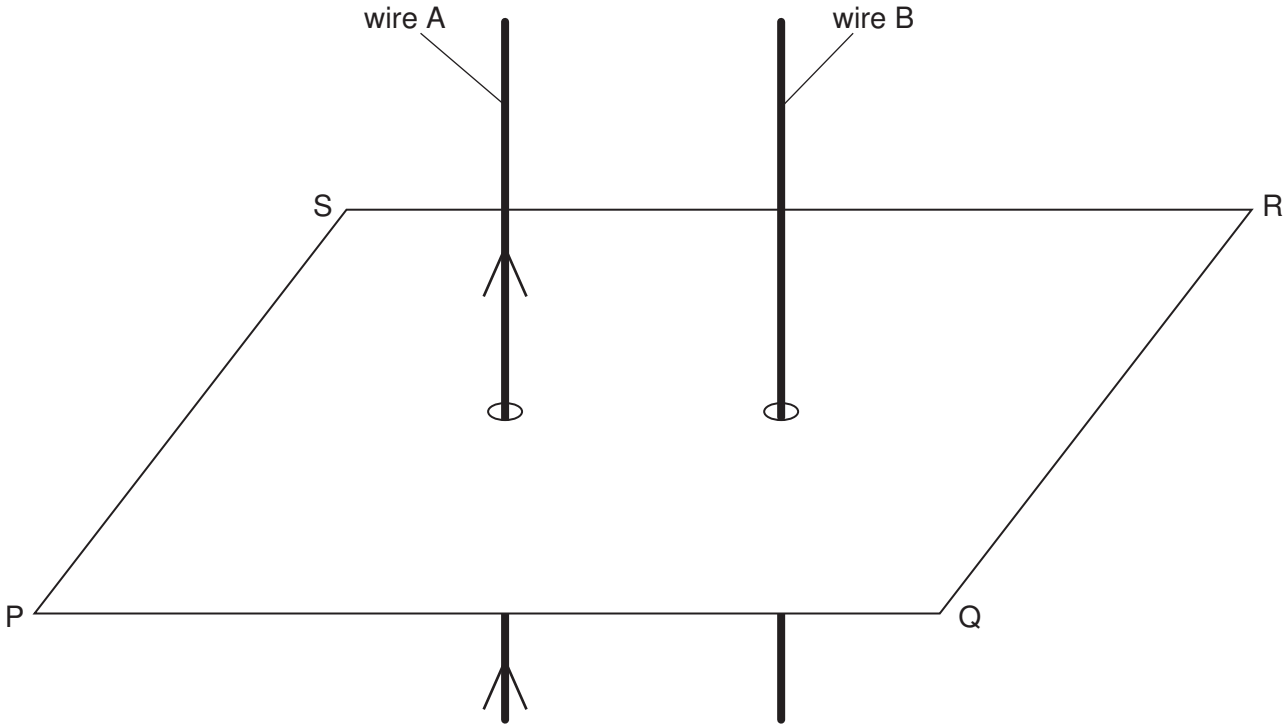

Fig. 7.1

(a) There is a current in wire A in the direction shown on Fig. 7.1.
On Fig. 7.1, draw four field lines in the plane PQRS to represent the magnetic field due to the current in wire A. [3]

(b) A direct current is now passed through wire B in the same direction as that in wire A. The current in wire B is larger than the current in wire A.

(i) On Fig. 7.1, draw an arrow in the plane PQRS to show the direction of the force on wire B due to the magnetic field produced by the current in wire A. [1]

(ii) Wire A also experiences a force. State and explain which wire, if any, will experience the larger force.

.....

.....

..... [2]

(c) The direct currents in wires A and B are now replaced by sinusoidal alternating currents of equal peak values. The currents are in phase.
Describe the variation, if any, of the force experienced by wire B.

.....

.....

.....

..... [3]

8 **(a)** Explain what is meant by a *photon*.

.....

.....

.....

..... [3]

(b) An emission spectrum is seen as a series of differently coloured lines on a black background.

Suggest how this observation provides evidence for discrete electron energy levels in atoms.

.....

.....

.....

..... [2]

9 (a) (i) State what is meant by the *decay constant* of a radioactive isotope.

.....

.....

..... [2]

(ii) Show that the decay constant λ and the half-life $t_{\frac{1}{2}}$ of an isotope are related by the expression

$$\lambda t_{\frac{1}{2}} = 0.693.$$

[3]

(b) In order to determine the half-life of a sample of a radioactive isotope, a student measures the count rate near to the sample, as illustrated in Fig. 9.1.

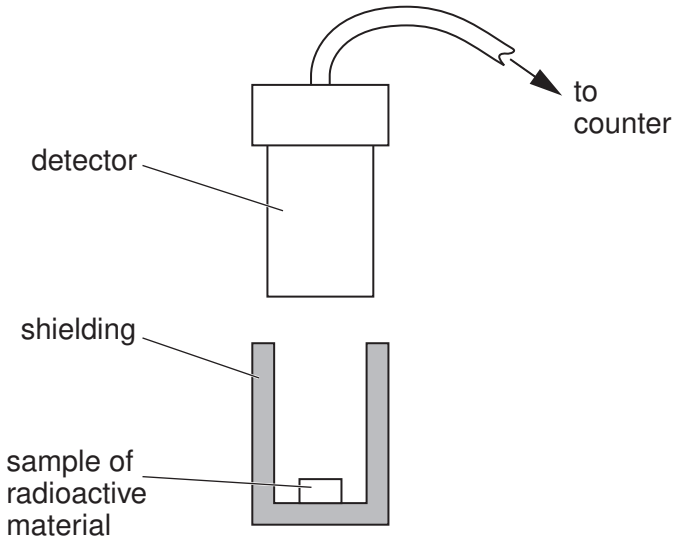

Fig. 9.1

Initially, the measured count rate is 538 per minute. After a time of 8.0 hours, the measured count rate is 228 per minute.

Use these data to estimate the half-life of the isotope.

half-life = ... hours [3]

(c) The accepted value of the half-life of the isotope in **(b)** is 5.8 hours.
The difference between this value for the half-life and that calculated in **(b)** cannot be explained by reference to faulty equipment.

Suggest two possible reasons for this difference.

1. .....

.....

2. .....

.....
[2]

© UCLES 2012

Section B

Answer **all** the questions in the spaces provided.

10 A student designs an electronic sensor that is to be used to switch on a lamp when the light intensity is low. Part of the circuit is shown in Fig. 10.1.

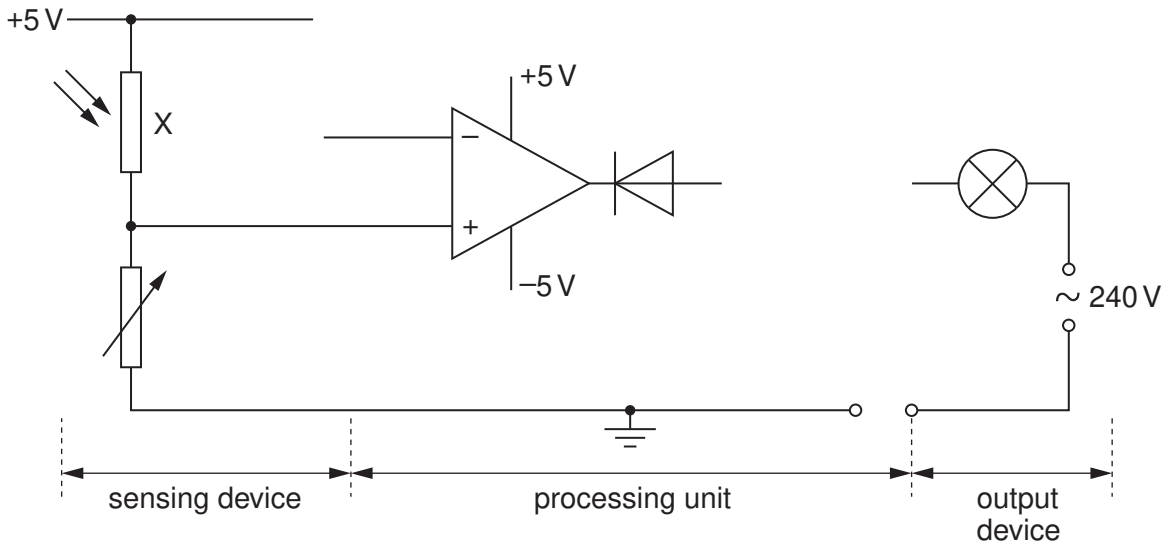

Fig. 10.1

(a) State the name of the component labelled X on Fig. 10.1.

..... [1]

(b) On Fig. 10.1, draw the symbols for

(i) two resistors to complete the circuit for the sensing device, [2]

(ii) a relay to complete the circuit for the processing unit. [2]

(c) **(i)** State the purpose of the relay.

.....

..... [1]

(ii) Suggest why the diode is connected to the output of the operational amplifier (op-amp) in the direction shown.

.....

.....

..... [2]

11 High-speed electrons are incident on a metal target. The spectrum of the emitted X-ray radiation is shown in Fig. 11.1.

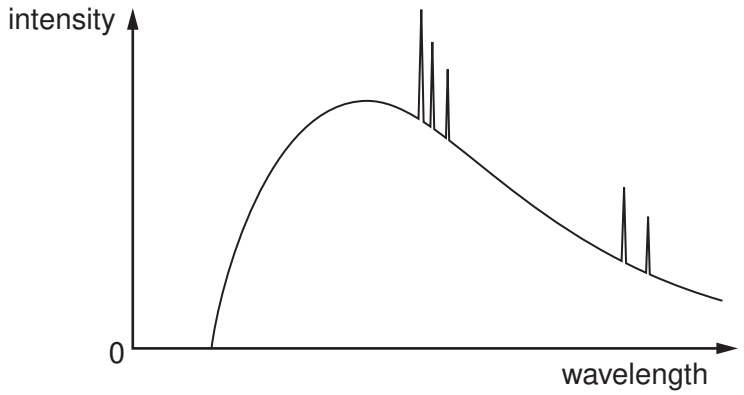

Fig. 11.1

(a) Explain why

(i) there is a continuous distribution of wavelengths,

.....

.....

..... [2]

(ii) there is a sharp cut-off at short wavelength.

.....

.....

..... [2]

(b) State

(i) what is meant by the *hardness* of an X-ray beam,

.....

.....

..... [2]

(ii) how hardness is controlled.

.....

.....

..... [2]

© UCLES 2012

(c) (i) Suggest why, when producing an X-ray image, long-wavelength X-ray radiation poses a greater hazard to health than short-wavelength radiation.

.....

..... [1]

(ii) Suggest how this hazard is minimised.

.....

..... [1]

12 A person is to be investigated using a magnetic resonance (MR) scanner.

(a) This technique involves the use of two superimposed magnetic fields.
Describe the functions of these two magnetic fields.

.....

.....

.....

.....

.....

..... [4]

(b) The frequency f of the electromagnetic waves emitted by protons on relaxation in an MR scanner is given by the equation

$$f = 2cB$$

where B is the total magnetic flux density and c is a constant equal to $1.34 \times 10^{8}\,s^{-1}\,T^{-1}$.
The magnetic flux density changes by $2.0 \times 10^{-4}\,T$ for each 1.0 cm thickness of tissue in a section.
The scanner is adjusted so that the thickness of each section is 3.0 mm.

Calculate, for corresponding points in neighbouring sections,

(i) the difference in magnetic flux density,

difference in flux density = ... T [1]

(ii) the change in emitted frequency.

frequency change = ... Hz [2]

© UCLES 2012

13 **(a)** In a mobile phone system, the area covered by the system is divided into a number of cells.
For this system, explain why

(i) neighbouring cells use different carrier frequencies,

.....

..... [1]

(ii) each cell has a limited area, even in sparsely populated regions.

.....

..... [1]

(b) A mobile phone handset is left switched on.
Explain why, although a call is not being made, the computer at the cellular exchange is still operating for this phone.

.....

.....

.....

..... [3]

© UCLES 2012

BLANK PAGE

Permission to reproduce items where third-party owned material protected by copyright is included has been sought and cleared where possible. Every reasonable effort has been made by the publisher (UCLES) to trace copyright holders, but if any items requiring clearance have unwittingly been included, the publisher will be pleased to make amends at the earliest possible opportunity.

University of Cambridge International Examinations is part of the Cambridge Assessment Group. Cambridge Assessment is the brand name of University of Cambridge Local Examinations Syndicate (UCLES), which is itself a department of the University of Cambridge.

© UCLES 2012